DIPDE

Division de l'Ingénierie du Parc
et De l'Environnement

The corium stabilization case: A challenging Radiation Protection project

1.
Overview of the modification

2.
Corium spreading & RP optimizations

3.
Passive flooding system & RP calculations

1. Overview of the modification

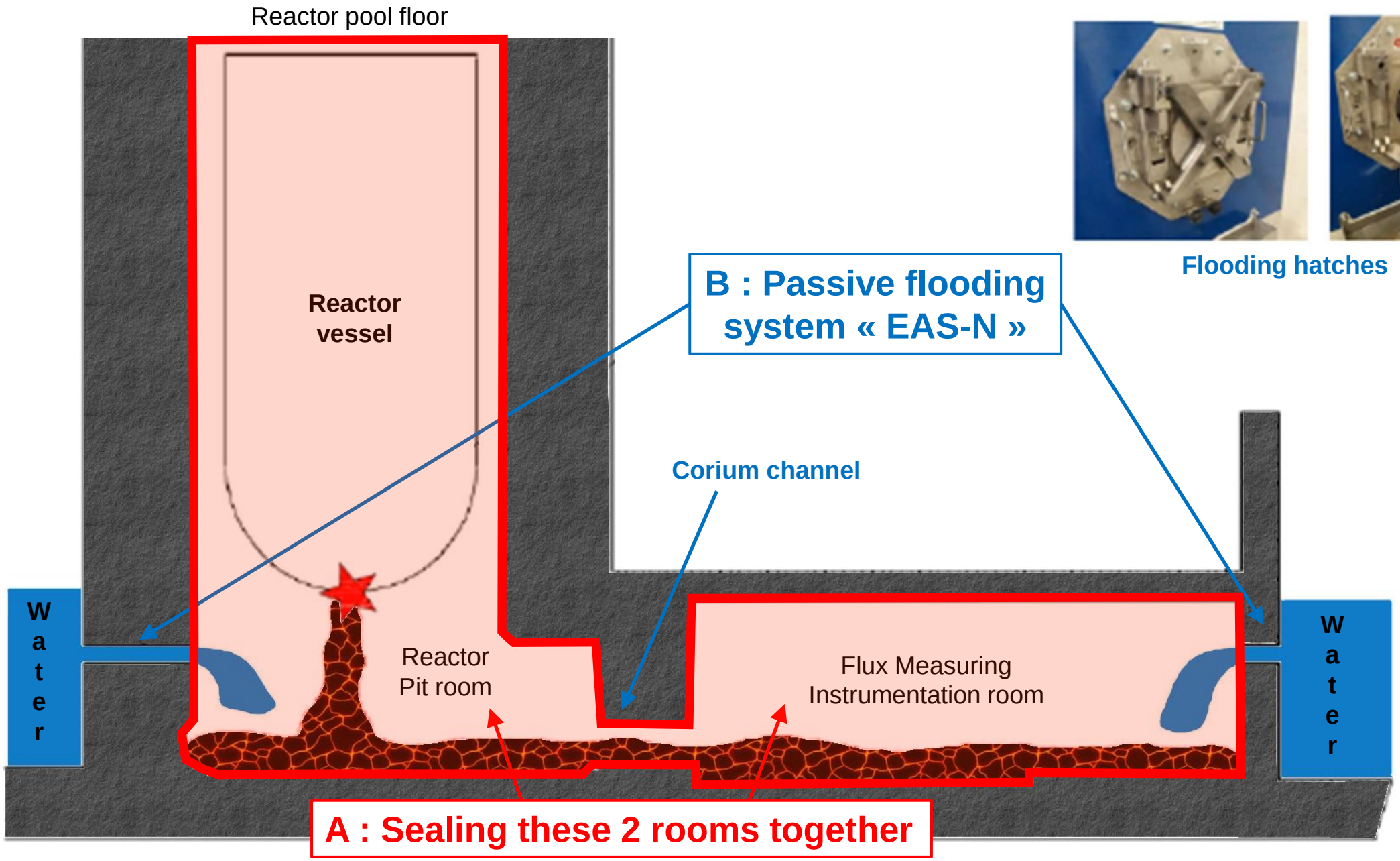

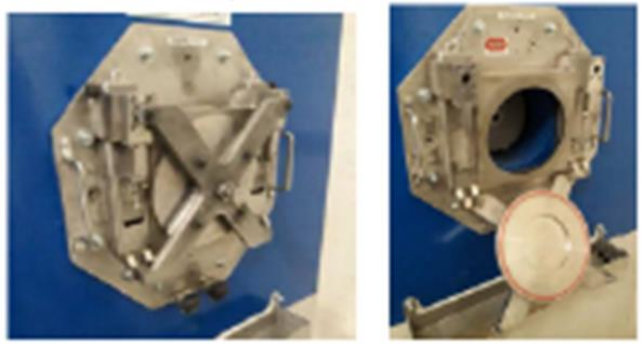

Flooding hatches

2. Corium spreading: sealing operations

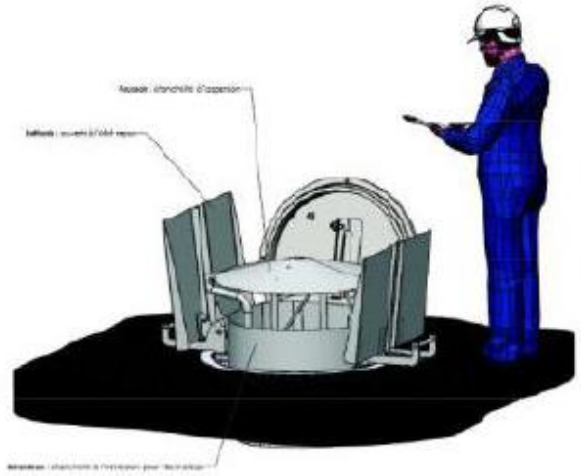

Reactor pool floor:

→ Sealing of reactor neutronic power (RPN) measuring chambers

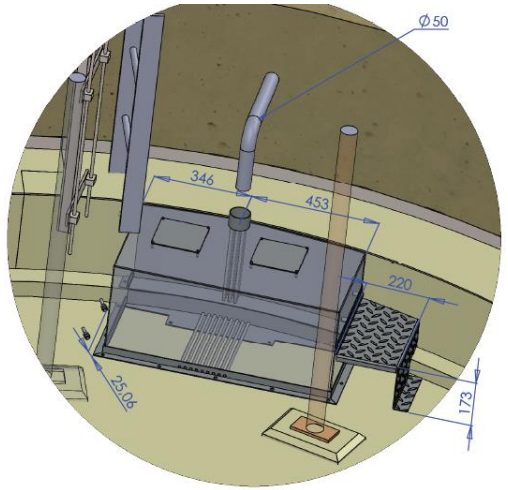

Reactor Pit & Flux Measuring Instrumentation rooms:

→ Waterproofing

→ **Strengthening sumps and drains against corium**

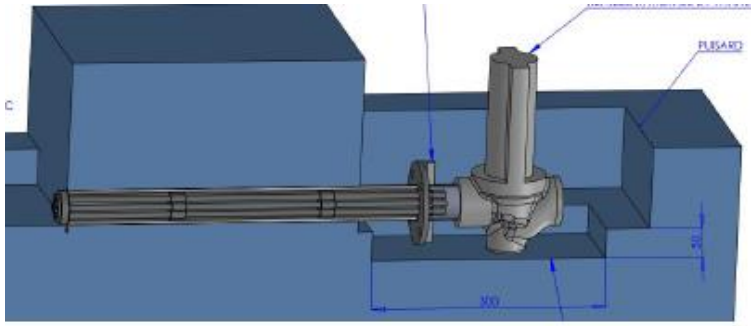

2. Corium spreading: sumps & drains

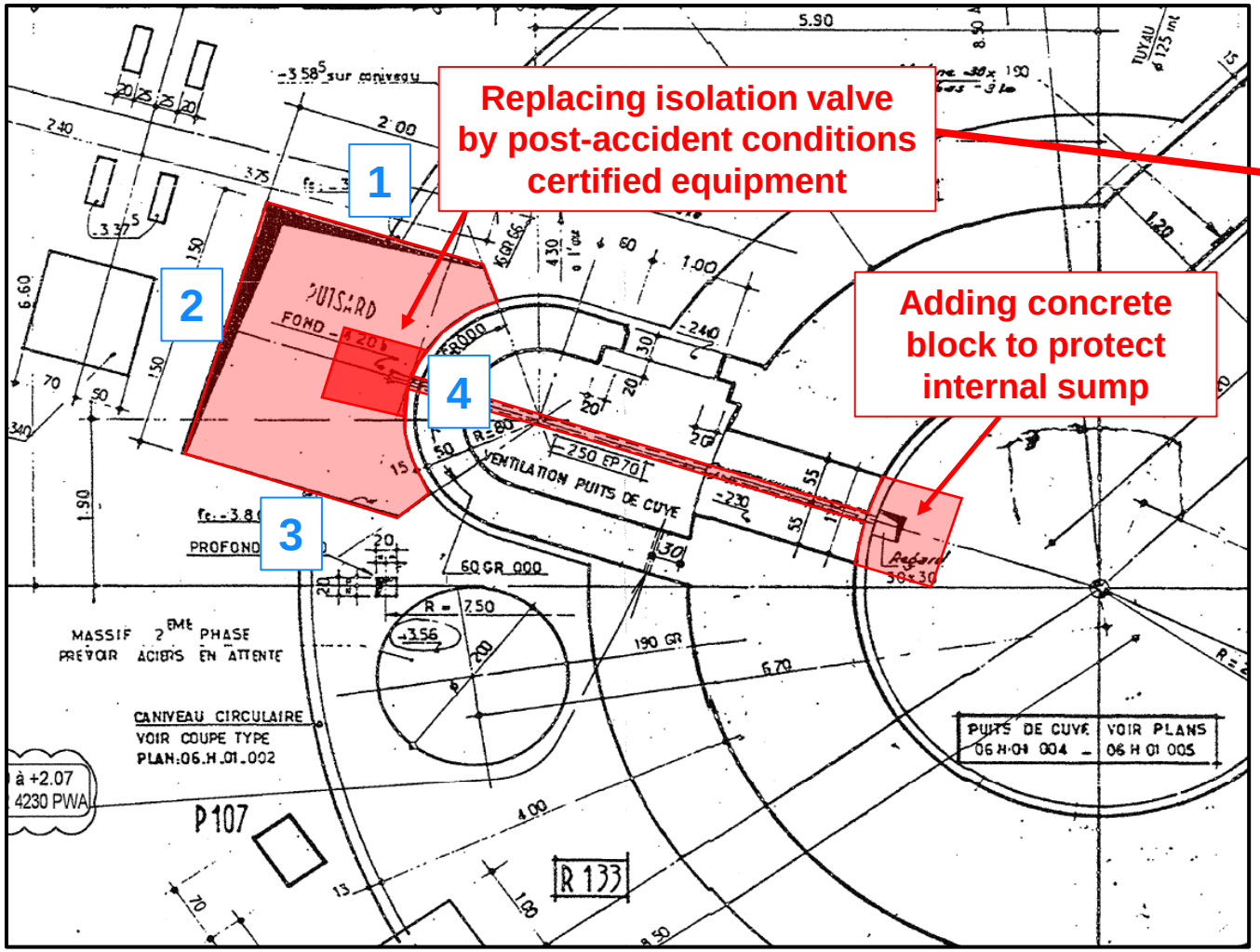

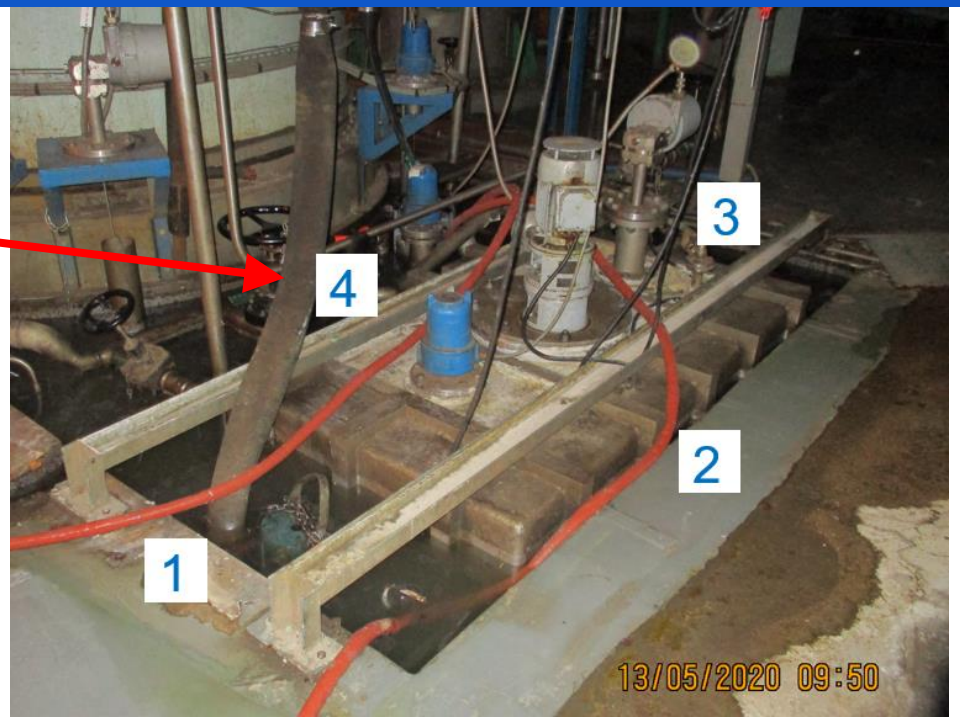

Dose rate @ 50cm must be **≤ 0,5 mSv/h** for welding operations

Initial radiological context:

	Dose rates in mSv/h			
	Contact	@ 30cm	@ 50cm	@ 1m
1	10.8	7.5	5.5	3.4
2	6	3.8	2.6	2
3	15	8	5.8	3.2
4	11	8	6	3.6

2. Corium spreading: RP optimizations

Decontamination of the sump

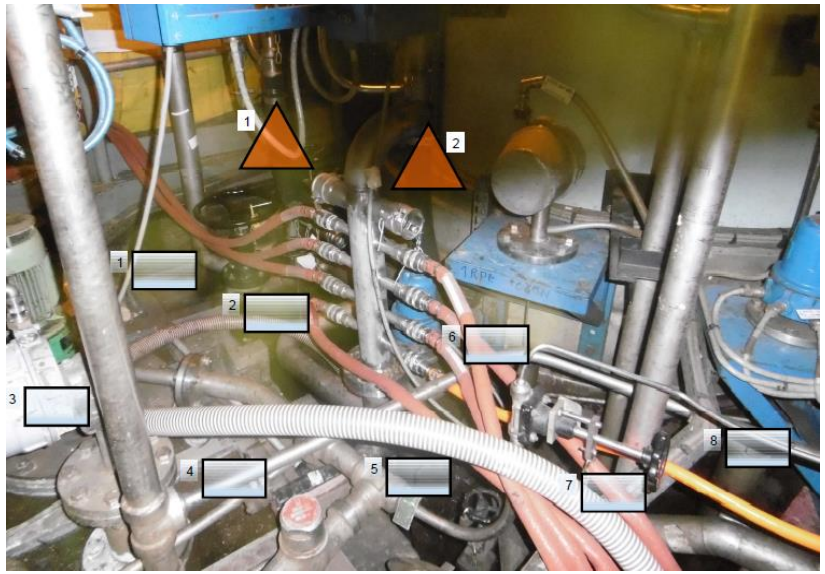

Biological shielding (T-flex ® bands)

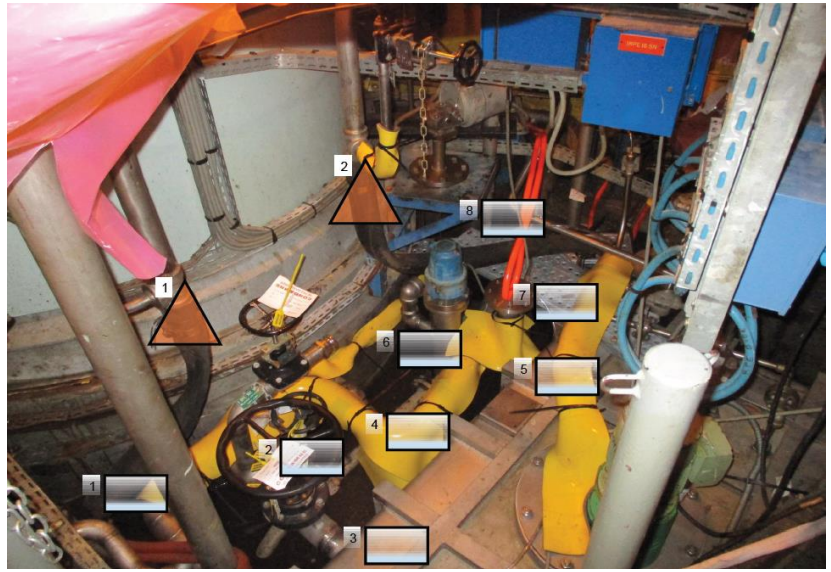

Remote coring

- **Cumulated dose rate reduction factors must be ≥ 12**
- **Dosimetry costs must be contained**
- **Highly depends on the initial state of the sump**

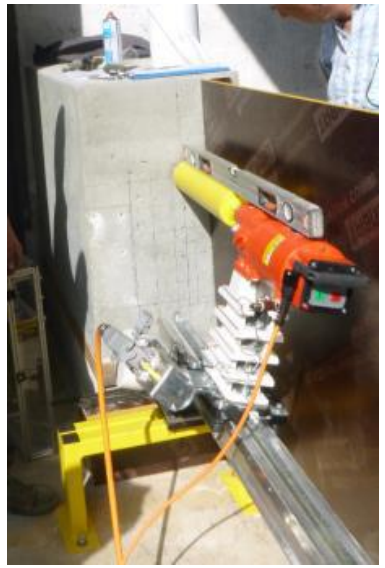

Creation of hoppers without modifying radiological zoning

Guide tubes in
Reactor Pit room

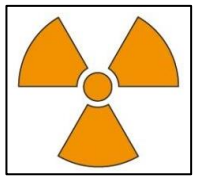

2 to 100 mSv/h

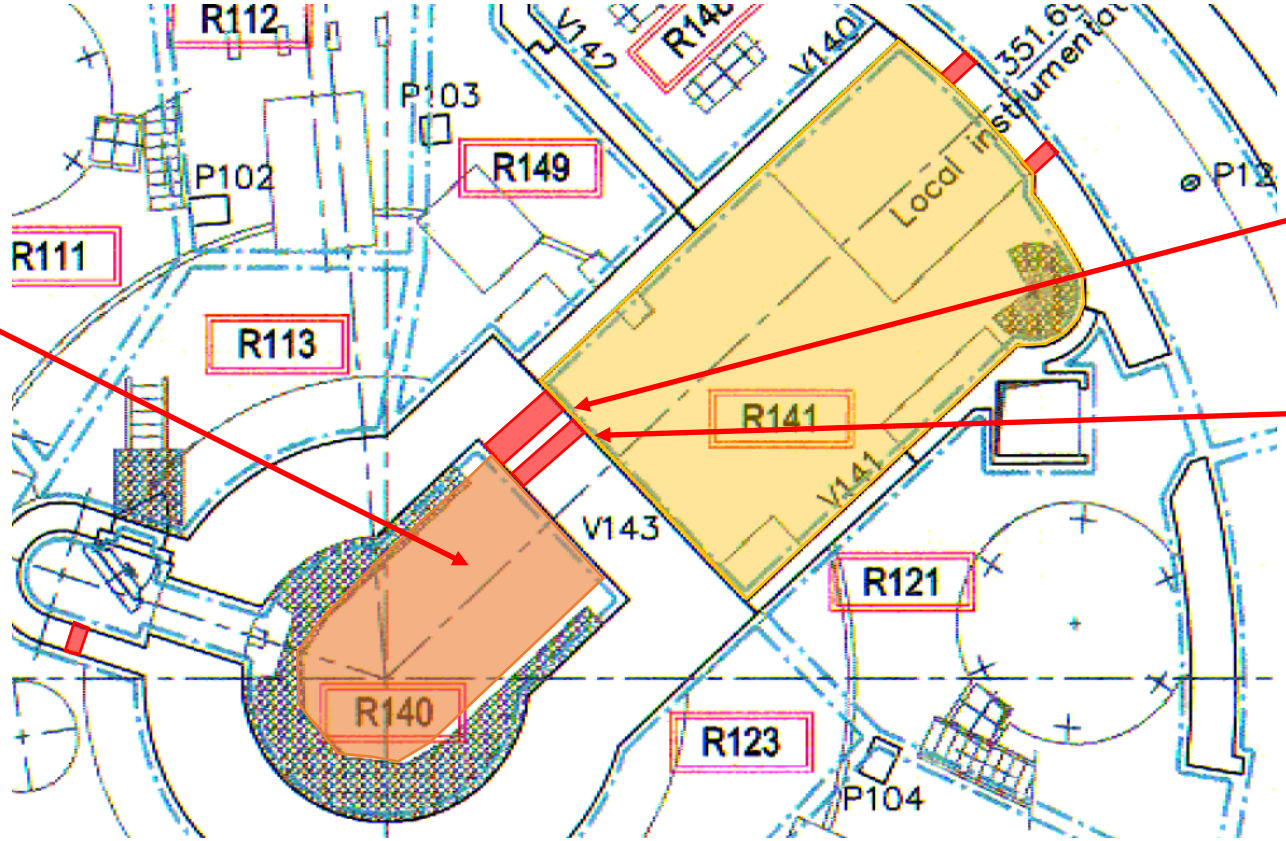

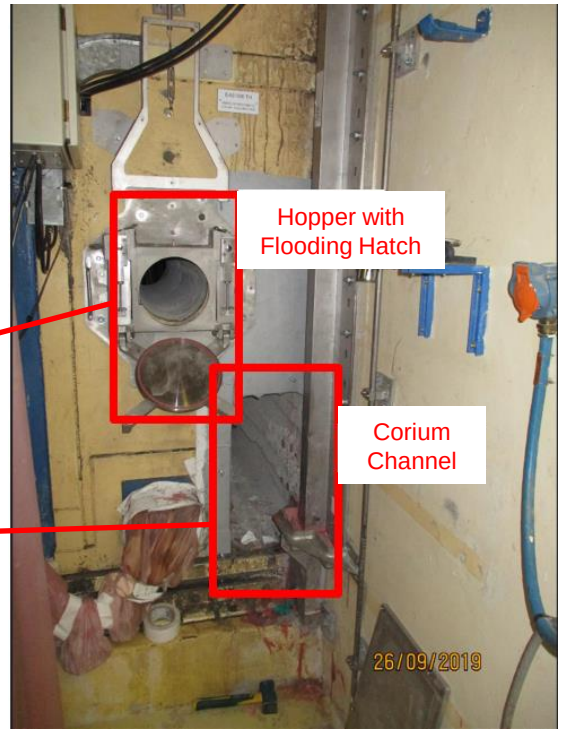

Flux Measuring Instrumentation room

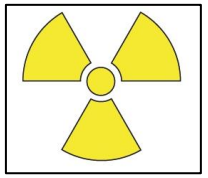

0,025 to 2 mSv/h

3. Passive flooding system: RP calculations

MCNP Calculations

Impacts on ambient dose rate

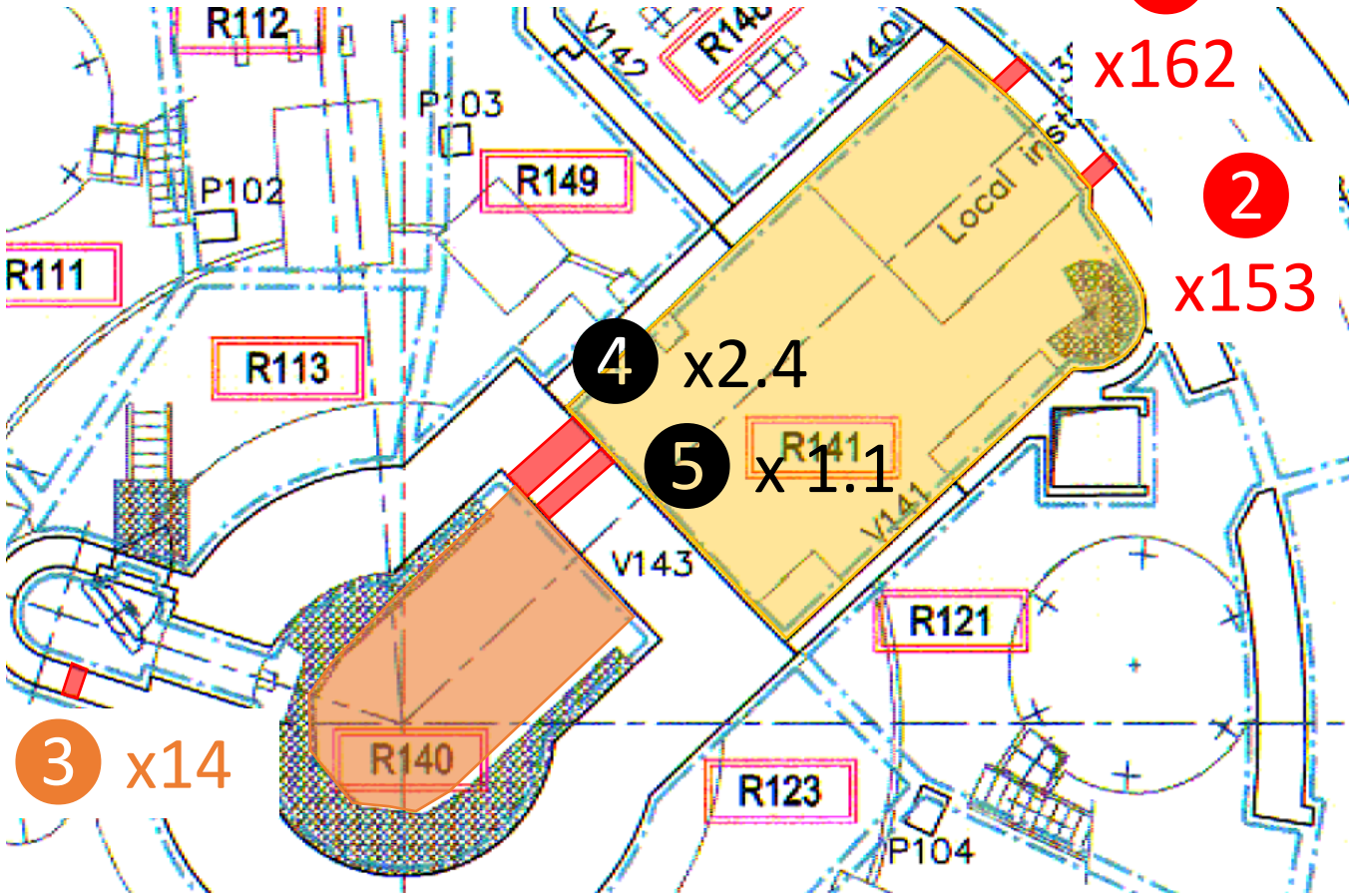

1 & 2

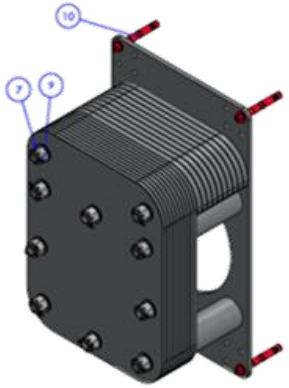

10cm of steel

3

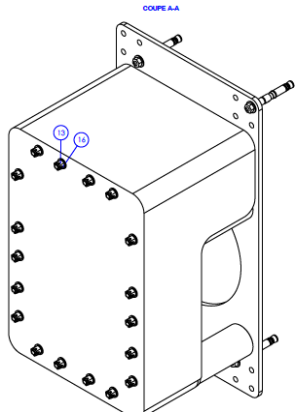

15cm of RTV FA 878 HD
+ 1cm of steel

5

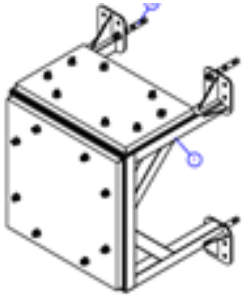

1,7cm of RTV FA 878 HD

3. Passive flooding system: Final measurements

Dose rate measurements

Before/after modification

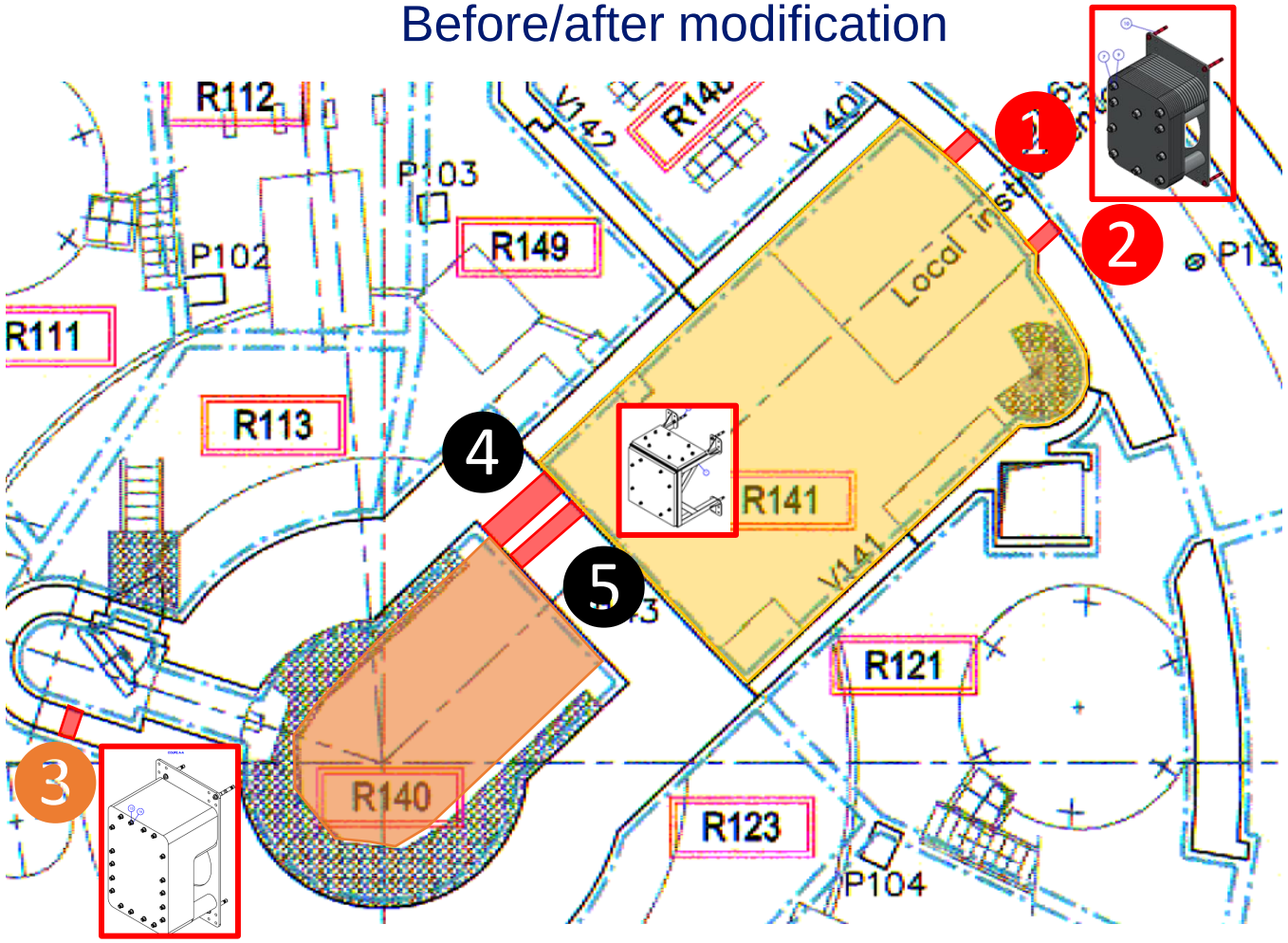

	Dose rate before/after (µSv/h)		
	Contact	50cm	1m
1	3 3	2 7	2 7
2	3 3	2 3	2 10
3	170 150	100 230	90 200
4	220 5	40 2	35 1
5	170 10	40 2	35 2

Thank you

DIPDE
Division de l'Ingénierie du Parc et De l'Environnement

First results

CPY NPP	Expected Optimized Dose (H.mSv)	Integrated Dose (H.mSv)
TRI1	118	112
TRI2	126	117
GRA1	175	169